WEIGHTED SUIT TO ENHANCE MUSCLE DEVELOPMENT

TECNOLOGÍA PATENTADA

DATOS DE CONTACTO:

Research Results Transfer Office-OTRI
University of Alicante
Tel.: +34 96 590 99 59
Email: areaempresas@ua.es
http://innoua.ua.es

RESUMEN

The research group has developed a weighted suit that enhances muscle development. It is very simple: it improves ergonomics, avoids rubbing, it is easy to use (the suit can be worn throughout the day) and is designed to avoid injuries and pathologies and increase training time.

The suit has weighted segments arranged proportionally over all the different parts of the user's body (the exact arrangement is determined by personalised anthropometric studies).

The group is seeking companies interested in acquiring and using the technology.

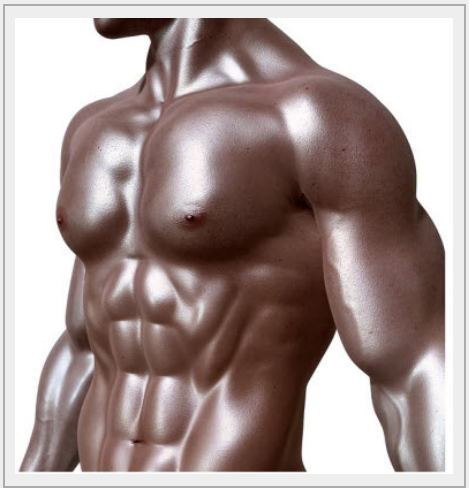

INTRODUCCIÓN

Since 1902, training has been carried out using weights to improve sporting performance. These weights are worn on certain parts of the body, and are typically ankle bands, wrist bands and weighted jackets.

These solutions have certain drawbacks, such as:

- Weighted jackets often cause injuries.

- Ankle and wrist bands do not spread the load uniformly, but concentrate it at certain points. These leads to different angular speeds and more acceleration in some muscle segments than in others, thus breaking the kinetic chain of the movements, leading to major pathologies in those using them.

- They are uncomfortable.

- They are not apt for continued uses, meaning that training time is limited.

DESCRIPCIÓN TÉCNICA

The group has developed a weighted suit that enhances muscle development. It consists of a jumpsuit made from a flexible, elastic material that adapts to the user's body to improve ergonomics and avoid rubbing. It has weighted segments arranged proportionally over all the different parts of the user's body, leaving the head, hands, feet and the main joints (knees, ankles, elbows, shoulders, wrists and neck) to move freely.

Each segment is given a greater or lesser load, according to the user's needs and the activity to be carried out. The arrangement of

the loads is determined, for example, by personalised anthropometric studies using the Marfell-Jones methodology.

The weighted segments are arranged lengthwise along the legs and arms and vertically on the trunk. On each leg, they are arranged around the bottom of the calf, around the thigh and all down the outside of the leg. On each arm, they are located around the forearm, biceps and triceps. On the trunk, they are found around the abdomen and pelvis, down the sides up to the armpits, on the back and the upper chest (*See Figure 1*).

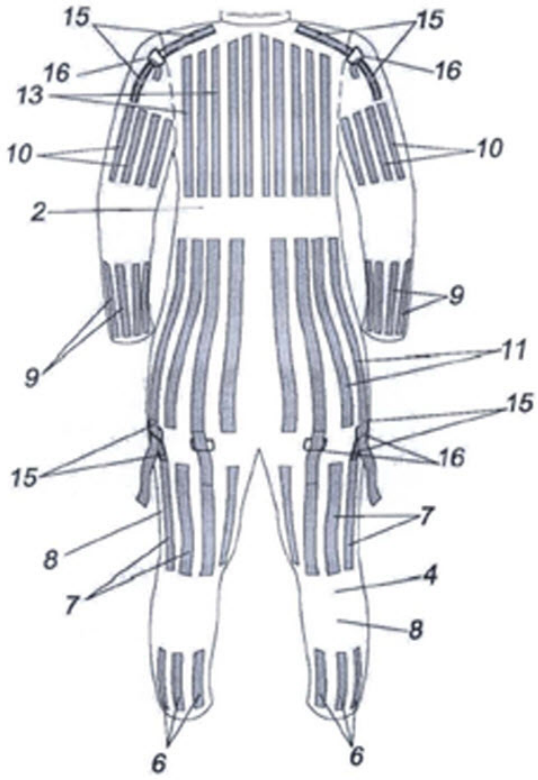

Figure 1: Rear view of the suit.

The weighted segments are tubular housings filled with lead shavings and the amount can be adjusted in order to increase the load as the physical condition of the user improves. So as to adjust the amount of filling, the tubes have openings with a flexible closure and are made of strong, flexible, non-elastic fabric sewn to the outside of the elastic jumpsuit (See Figure 2).

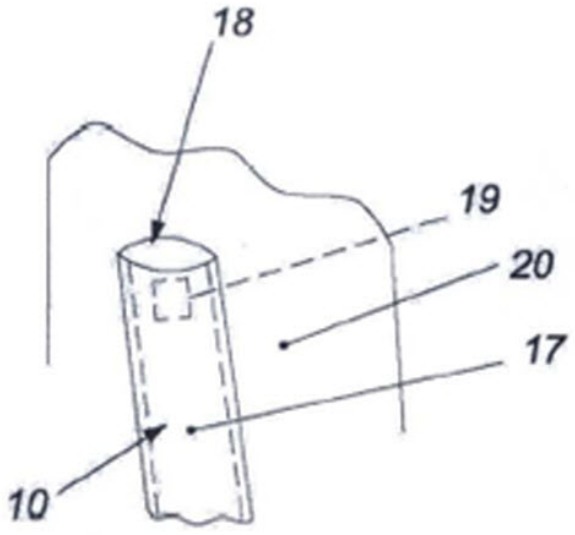

Figure 2: Detailed view of the opening of one of the weighted segments

In order to prevent the weighted segments from rubbing, reinforcements have been added to the legs, arms and trunk of the jumpsuit. These are flexible, virtually non-elastic straps and can be fixed or adjusted to the suit (in the latter case they are fitted with buckles).

ADVANTAGES:

· Simple construction.

· Improved ergonomics.

· Avoids rubbing.

· Easy to use (the user wears the suit throughout the day).

· Does not cause injuries or pathologies.

· Gains training time.

· Enhances muscle development without a conscious effort.

INNOVATIVE ASPECTS:

The suit is fitted with weighted segments arranged proportionally over the different parts of the user's body, leaving the head, hands, feet and main joints free. Each segment is allocated a greater or lesser load according to the user's needs and the activity to be carried out. The arrangement of the weights is determined by personalised anthropometric studies using the Marfell-Jones methodology. The suit is ergonomic and avoids rubbing, is easy to use (it allows muscle development while the user is not training, thus saving time) and, most importantly, does not cause injuries or pathologies.

ESTADO ACTUAL

We have developed a prototype that is regularly used for training by several members of the female Beach Volleyball and Volleyball teams who have successfully taken part in National and International competitions. The suit can be tested to confirm the results.

APLICACIONES DE LA OFERTA

SPORTS CLOTHING: The suit enhances muscle development of elite sportsmen and women who wish to obtain maximum performance in the least possible time, without causing injuries or pathologies of any kind.

COLABORACIÓN BUSCADA

The research group is seeking companies interested in acquiring and using the technology. To this end, it is ready to sign any of the different types of technology transfer (licensing the patent, assignment, etc.).

DERECHOS DE PROPIEDAD INTELECTUAL

The technology is protected by patent:

- Application number: P200800928.

- Date of application: 03/04/2008.

SECTORES DE APLICACIÓN (2)

Footwear and Textile
Medicine and Health