POLYETHYLENE PAINTING. AN APPLICATION OF SPRAY PIGMENTATION PROCESS FOR COATING PLASTIC ARTICLES

TECNOLOGÍA PATENTADA

DATOS DE CONTACTO:

Research Results Transfer Office-OTRI
University of Alicante
Tel.: +34 96 590 99 59
Email: areaempresas@ua.es
http://innoua.ua.es

RESUMEN

The University of Alicante jointly with the Queen's University at Belfast has developed a process to pigment coating plastic articles by mean of spring polymer and pigment powder. The process is tested at laboratory scale and is based on the melting "in situ" of polymer powder in combination with the pigment onto the surface of the part already formed. The technology overcomes traditional problems when coating plastic articles and is very appropriated to polyethylene painting. Partners for acquiring the patent rights are sought.



INTRODUCCIÓN

Normal practice when colouring or protecting a plastic material is to introduce the pigment when forming the plastic such that the pigment particles lodge themselves interstitially between the polymer molecules giving the plastic material the colour of the pigment throughout.

This has the obvious disadvantages that an extra step has to be introduced during the production of the plastic, only one colour can be applied, and the process is irreversible. A large amount of pigment is also required to colour the whole plastic as the pigment is included during its make-up rather than simply coated on its surface. Furthermore, the pigment added during the manufacture of the plastic will alter its physical properties such as strength, which may be undesirable.

The developed technology is directed towards overcoming these problems and in particular to providing a cheaper and more versatile process for coating various surfaces including plastic materials.

DESCRIPCIÓN TÉCNICA

The University of Alicante jointly with the Queen's University at Belfast has developed a process to pigment coating plastic articles by means of spring polymer and pigment powder. This technology is very appropriated to polyethylene paint.

The process is based on the melting "in situ" of polymer powder in combination with the pigment onto the surface of the part already formed. The temperature of the surface of the part, as well as the time of contact of the 'paint', in its molten state, with the part must be controlled.

The powder to be melted can be a dry blend of the polymer particles and the pigment particles, or a ground masterbatch of the pigment concentrate, previously prepared. This powder must have the adequate particle size and must be feed to a fluidised bed or a gas agitated bed in order to prevent the formation of agglomerates.

Care must be taken with regard to the possible shape deformation if the part is in contact with the painting spray or jet for a long

time. Consequently, the residence time of the parts in the painting or decorating chamber must be controlled. The safety of the process must also be considered, since the jet is at high temperature.

THE PROCESS

The process comprises the steps of:

1.- Admixing a plastic polymer in the form of a powder with a pigment to form a paint precursor

Typically, the powdered plastic has a small particle size which can be obtained by any conventional process, for example, mechanical or cryogenic grinding. Preferably, the powdered plastic has a particle size with a diameter of less than 0.01 mm. This will produce a high quality surface finishing paint. A larger particle size could be used where an intermediate surface finishing paint is required.

2.- Melting the paint precursor to form a liquid paint

The paint precursor to be melted can be a dry blend of the powdered plastic and pigment, or a ground masterbatch with these constituents. Preferably, the powdered plastic and pigment is in a ratio range of between 4: 1 and 9: 1. However, the ratio of the powdered plastic to pigment chosen depends on the effect desired such as, the thickness of the paint layer, the covering power of the pigment and its effect on the concentration of the liquid paint and the physical strength of the coating required. Different coatings ranging from translucent to opaque may be obtained by changing the concentration and/or covering power of the pigment.

The constituents of the paint precursor, with uniform particle size, are thoroughly mixed prior to melting, e.g. by fluidising the precursor in a conventional fluidising column. This promotes uniform properties and colour throughout the paint precursor and helps prevent the formation of agglomerates.

3.- Applying said liquid paint to the surface to be coated

The paint precursor is then melted to form a dispersion of liquid paint droplets. This is done in a heat exchanger using hot air as the heating medium, and optionally, the heat exchanger also acts as a spraying device using the hot air as a propellant gas to apply the liquid paint to the surface to be coated. The paint precursor can be heated prior to melting, for example by warming the air stream to the fluidising column.

Preferably, the plastic material to be coated is treated prior to being coated. Typically, this includes heating the surface of the plastic material, preferably to a temperature which will melt the surface. This improves the adhesion of the liquid paint to the plastic material. In principal, any temperature below the melting point of the plastic material may be used, however, the limiting temperature and treatment time will be that which will assure no shape distortion of the plastic material. The treatment of the plastic material may further include flame, plasma, corona and/or chemical etching of the surface of the plastic material to be coated. These treatments of the surface of the plastic material to be coated are particularly useful when the powdered plastic of the paint precursor is not the same or is not compatible with the plastic material to be coated. The treatment of the plastic material prior to being coated improves the compatibility and adhesion of the liquid paint to the plastic material providing a more resistant coating.

Generally, the pigment of the paint precursor may be of any type. Preferably the pigment is compatible with the powdered plastic of the paint precursor. The type of pigment may also be chosen to provide a liquid paint with special effects, for example metallic or pearl effects.

Next figure shows a process diagram:

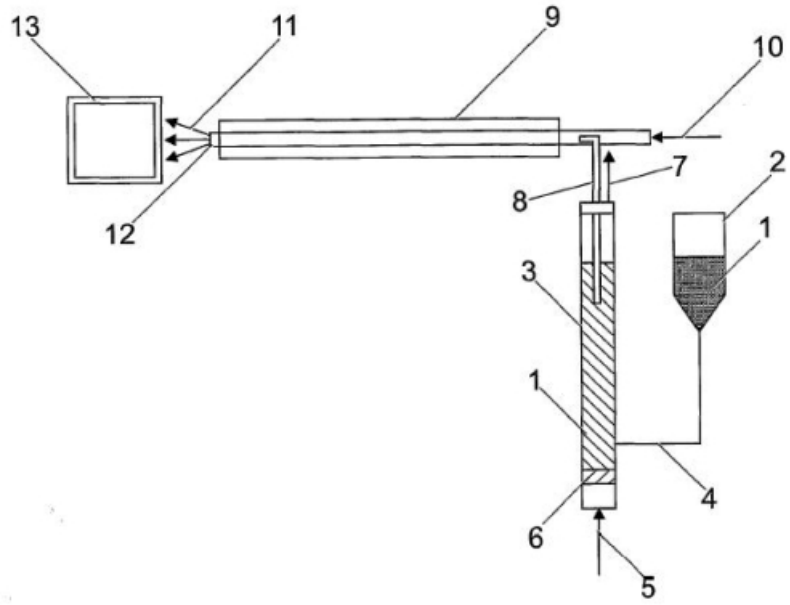

INNOVATIVE ASPECTS

- The developed technology overcomes traditional problems when coating plastic articles: extra steps in plastic production, multicolouring, irreversibility, pigment amount, cost, etc.

- The quality of the finishing can be significantly improved since the glossy of this painting can better than that obtained in the conventional process.

- It can be applied to polyethylene painting, a very spread out material.

MAIN ADVANTAGES

- Some of the benefits of the system include:

- The pigment consumption is remarkably reduced since the part is pigmented only on the surface.

- The properties of the polymer constituting the body of the part are unaltered.

- The parts can be decorated in different colours in a very simple way.

- The compatibility of the painting with the polymer is complete, since the painting is mainly the same polymer.

ESTADO ACTUAL

Over the last two years, two prototype machines have been developed both in Queen's at Belfast and Alicante in Spain and coloured samples have been produced successfully. The prototype and the process still need to be optimised for commercial use.

Some examples can be seen in following pictures:



A prototype machine can be seen in next picture:



APLICACIONES DE LA OFERTA

This process can be used to paint any suitable surface to provide a temporary or permanent coating. Such surfaces include plastic, metal, glass, ceramic, etc. Many suitable polymers are useable such as polyethylene, polypropylene, nylon, foamed EVA, etc.

One application is to coat metal such as the inside of a metal shell or mould, pre-moulding, to provide a coating attachable to the moulding material, e. g. as a colour scheme, to thicken an area of the moulding or to add any protective-like coating.

In coating plastics, the plastic material could be a thermoplastic material. Preferably, the powdered plastic of the paint precursor is the same polymer as the plastic material to be coated. Optionally, the powdered plastic of the paint precursor is a polymer which is compatible with the plastic material to be coated.

In some applications, the coating is useable as an adhesive between the surface to which it is applied, and a second surface, e. g. two plastic parts or plates. Sometimes, the paint precursor includes one or more additives or filler materials such as a UV-adsorber, microwave, etc., glass microspheres, antibacterial agent, etc. Such substances are known in the art, and enhance the properties of the coating.

COLABORACIÓN BUSCADA

The University of Alicante is looking for partners interested in:

· Developing the technology for commercial use

· Establishing patent license agreements to acquire the rights to use or commercialising the technology

DERECHOS DE PROPIEDAD INTELECTUAL

British Patent Application No. 0011284.7

The Queen's University of Belfast & The University of Alicante, Spain

Catch: Spray Pigmentation

IP Title: Coating Process

PERFIL DEL GRUPO DE INVESTIGACIÓN

The research team responsible for this new technology are all members of the Department of Chemical Engineering in the University of Alicante, consisting of: 5 senior professors, 9 full-time professors, 10 part-time professors, 4 assistants, 12 grant-holders and 6 members of the administrative staff.

Our main research fields are:

- Pyrolysis, Gasification and Incineration
- Environmental Water Management
- Environmental Managemente of Industrial Waste
- Synthesis and Optimization of Chemical Processes
- Rectification and Extraction of Multicomponent Mixtures
- Activated Carbon
- Balance between Solid-Liquid-Liquid-Solid Phases
- Holographic Interferometry
- Polymer Processing
- Food Technology
- Time of Stay Distribution in Electrochemical Reactors
- PCDD/PCDF Detection and Analysis

SECTORES DE APLICACIÓN (6)

Footwear and Textile
Toys
Wood and Furniture
Materials and Nanotechnology
Chemical Technology
Transport and Automotive